| ECO NO. | DATE | REV. | REVISION RECORD | AUTH. | DR.BY |
|---|---|---|---|---|---|
| 4751 | 04/10/01 | A | REMOVED PREHEAT SWITCH, PREHEAT IS NOW PART OF IGNITION. ADDED TIME DELAY RELAY CIRCUIT. | | JH |

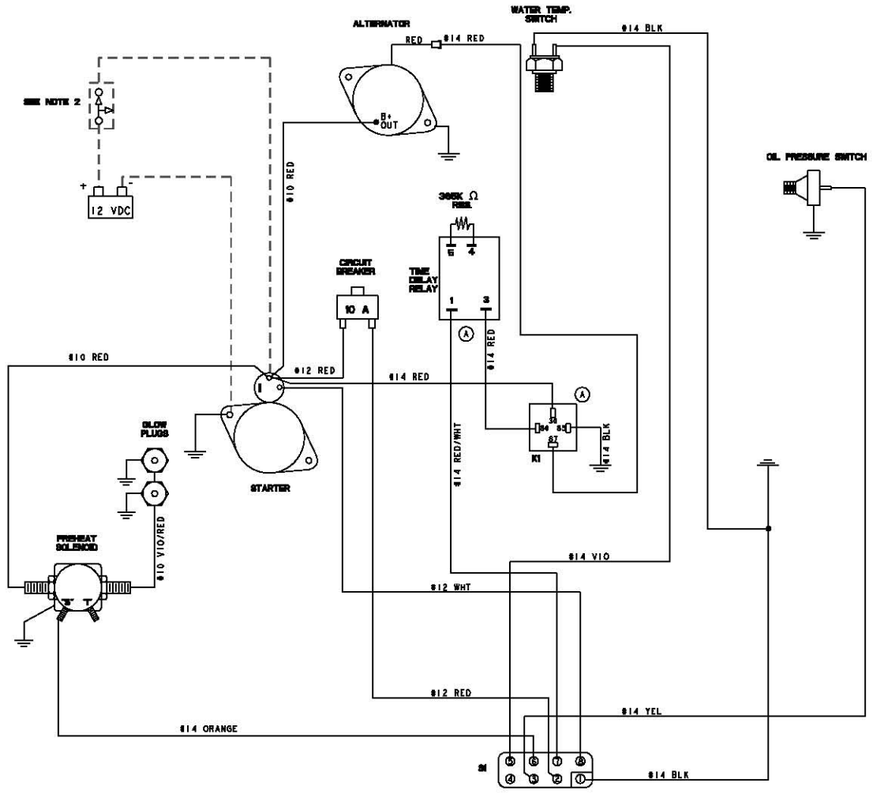


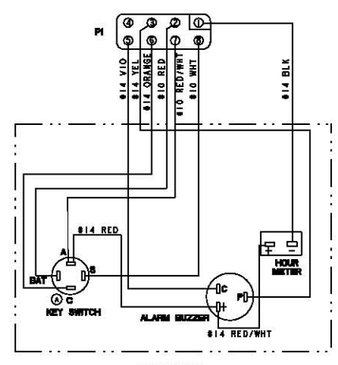


REMOTE PANEL

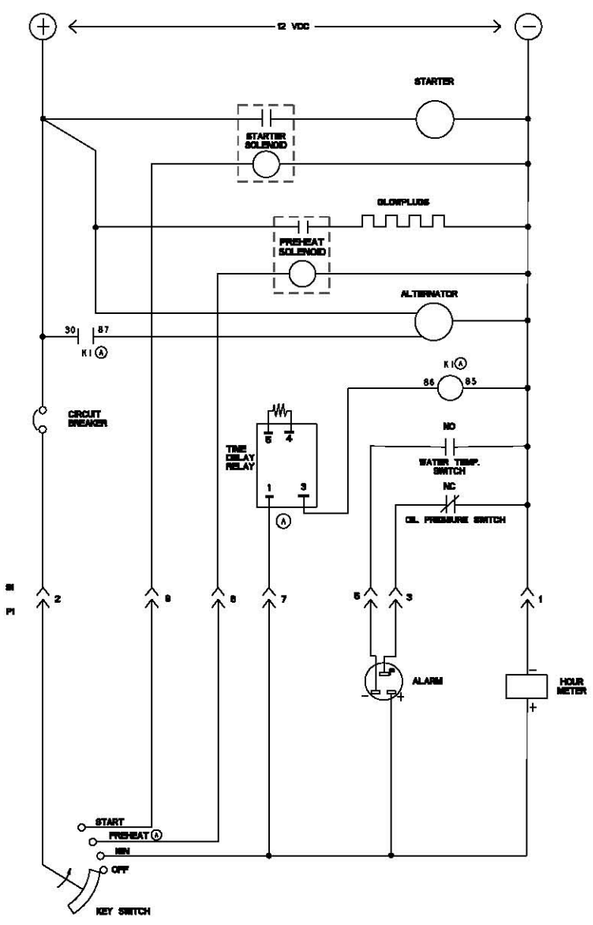


NOTES:

1. THIS PRODUCT IS PROTECTED BY A MANUAL RESET CIRCUIT BREAKER LOCATED NEAR THE STARTER. EXCESSIVE CURRENT WILL CAUSE THE BREAKER TO TRIP AND THE ENGINE WILL SHUT DOWN. THE BUILDER/OWNER MUST BE SURE THAT THE INSTRUMENT PANEL, WIRING, AND ENGINE ARE INSTALLED TO PREVENT CONTACT BETWEEN ELECTRICAL DEVICES AND SEAWATER.

2. AN ON-OFF SWITCH SHOULD BE INSTALLED BETWEEN THE BATTERY AND STARTER TO DISCONNECT THE BATTERY IN AN EMERGENCY AND WHEN LEAVING THE BOAT. A SWITCH WITH A CONTINUOUS RATING OF 175 AMPS. AT 12 VDC WILL SERVE THIS FUNCTION. THIS SWITCH SHOULD NOT BE USED TO MAKE OR BREAK THE CIRCUIT.

| TOLERANCES (UNLESS OTHERWISE NOTED) | WESTERBEKE CORPORATION AVON MA. 02322 | | |
|---|---|---|---|
| INCHES / MILLIMETERS | TITLE: WIRING DIAGRAM/SCHEMATIC TA-1, PROPULSION ENGINE | | |
| DIMENSIONS IN INCHES / MILLIMETERS | DRAWN BY: CRISTA SANIBA | DATE: 5/DEC/06 | MATERIAL: |
| | APPROVED BY | DATE | |
| | SCALE: NONE | SIZE: E | DRAWING NUMBER: 45593 |
| | SHT. 1 OF 1 | | REV. A |